WASHINGTON DEPARTMENT OF NATURAL RESOURCES
DIVISION OF GEOLOGY AND EARTH RESOURCES

CARLSBORG QUADRANGLE
WASHINGTON—CLALLAM CO.
7.5 MINUTE SERIES (TOPOGRAPHIC)

OPEN FILE OF 79-20

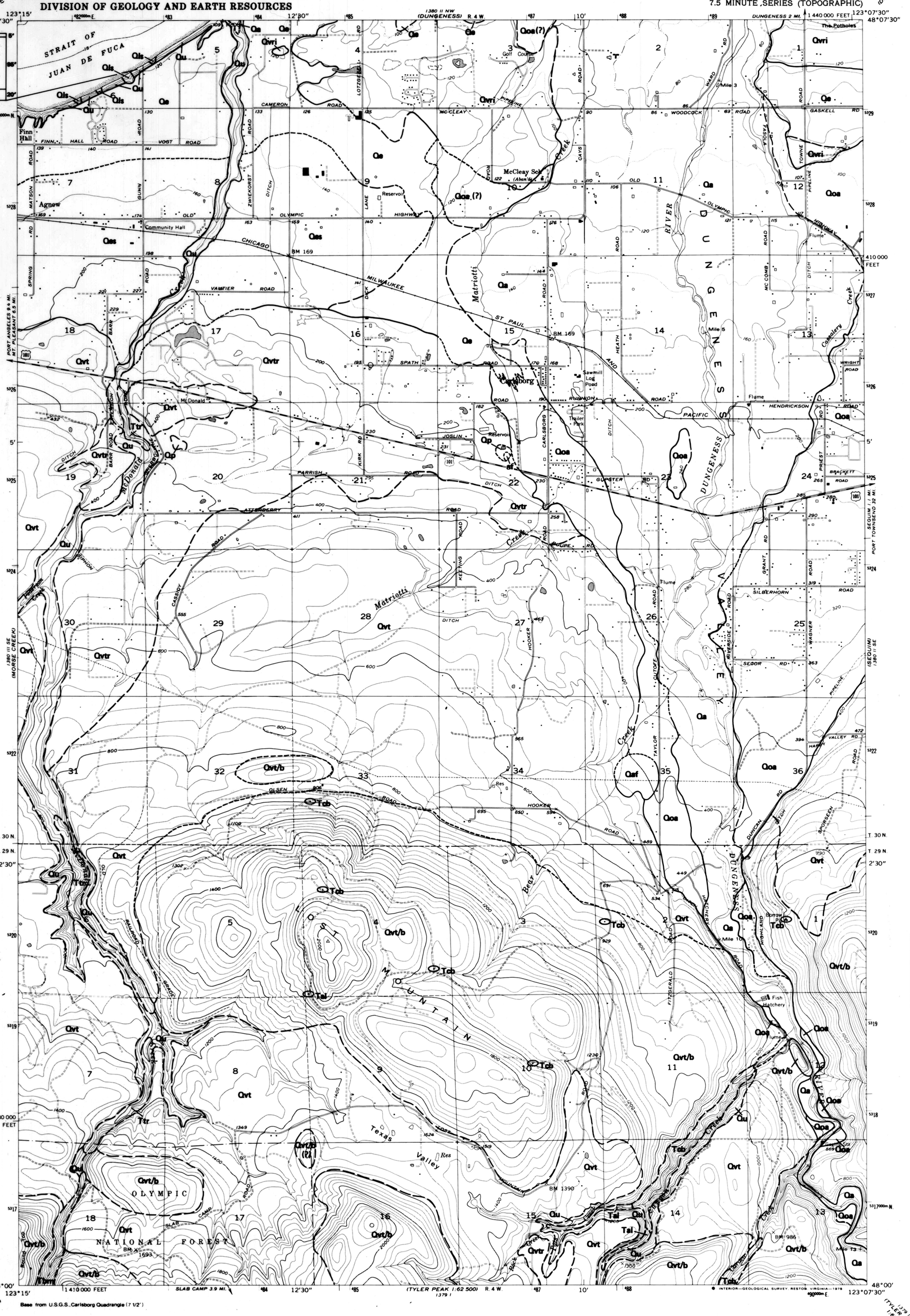

Base from U.S.G.S., Carlsborg Quadrangle (7 1/2')

LEGEND

- **af** — Artificial fill
- **Qa** — Alluvium
- **Qp** — Peat and marsh deposits
- **Qls** — Landslide deposits
- **Qaf** — Alluvial fan
- **Qoa** — Older Alluvium
- **Qes** — Everson sand
- **Qe** — Everson Glaciomarine Drift
- **Qvri** — Vashon recessional, ice-contact stratified gravels, and fine-grain marine sediments
- **Qvtr** — Vashon reworked till
- **Qvt** — Vashon till
- **Qvt/b** — Vashon till overlying bedrock
- **Qpsc** — Pre-Vashon silts and clays
- **Qu** — Quaternary deposits, undifferentiated
- **Ttr** — Twin River Group, undifferentiated
- **Tal** — Aldwell Formation
- **Tcb** — Crescent Formation basalt
- **Tbm** — Blue Mountain unit of Tabor and Cady (1978)

definite contact

approximate contact

inferred contact

exposure of identified bedrock

CORRELATION OF MAP UNITS

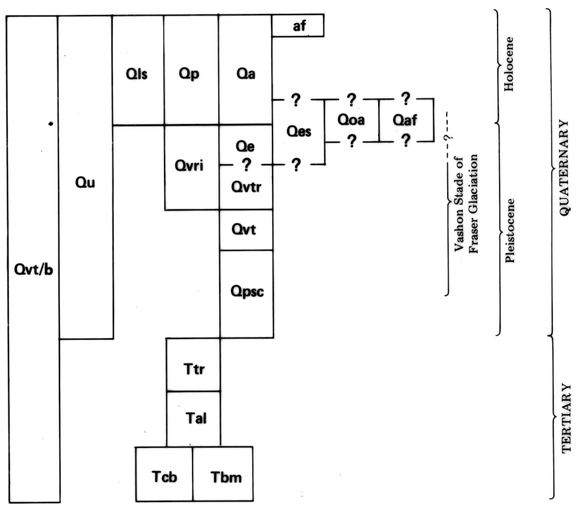

DESCRIPTION OF UNITS

af ARTIFICIAL FILL — Artificial fill, topography modified by relatively thick addition of soil, sediments, rock, vegetative debris and garbage

Qa ALLUVIUM — Deposited in and along present streams. Varies from cobbly stream gravels laid down in channels to finer grained sands, silts, and clays deposited in a floodplain environment. Particle sizes vary laterally and vertically due to the lateral migration of streams across their floodplains. Includes significant but unmappable quantities of organic matter. Subject to high water tables

Qp PEAT AND MARSH DEPOSITS — Formed by the accumulation and decomposition of organic material in wet depressions and other areas of poor drainage

Qls LANDSLIDE DEPOSITS — Mapped where there is a geomorphic expression of active or old landslides. Generally outlines entire landform, from headwall to toe. May include both landslide scars and debris. Debris consists of variously textured colluvium resulting from slumps, slides, falls, and flows

Qaf ALLUVIAL FAN — Identified by its geomorphic expression in aerial photograph

Qoa OLDER ALLUVIUM — Floodplain terrace cobble gravels. Probably represents different times and levels of deposition by early Dungeness River. Contact with Qa uncertain in section 12, T. 30 N., R. 4 W

Qes EVERSON SAND — Sorted and stratified sand deposited on fan (or delta?) of McDonald Creek. Fan surface grades to surface of Qe. Unit may interfinger with Qe

Qe EVERSON GLACIOMARINE DRIFT — Poorly sorted, weakly stratified to massive deposit of pebbly silt and clay. Lithology includes bedded silt and sand eastward and southward. Underlies and(or) interfingers with Qvri, Qes, and possibly Qoa near Carlsborg

Qvri VASHON RECESSIONAL, ICE-CONTACT STRATIFIED GRAVELS, AND FINE-GRAINED MARINE SEDIMENTS — Characterized by ice-contact morphology (mounds and basins); sediments showing deformation as a result of the melting of supporting ice. In the Dungeness quadrangle to the north, stratified gravels interfinger with locally fossiliferous, pebbly, silty clay interpreted as Everson Glaciomarine Drift. This suggests that stratified gravels were being deposited near the melting ice margin in association with a coastal glacial marine environment

Qvtr VASHON REWORKED TILL— Primarily sand and gravel stream deposits and lag deposits resulting from the washing and winnowing of Vashon till. Reworking of till surface probably occurred during ice recession in this area, but some of the deposits may be Holocene in age

Qvt VASHON TILL — Lodgment till, a compact, poorly sorted nonstratified pebbly sandy silt with occasional boulders; generally quite hard as a result of compaction by thick glacier ice. Mapped where thickness is greater than approximately 1 meter. May include local areas of ablation till, generally a loose, nonstratified pebbly silty sand with noticeable voids

Qvt/b VASHON TILL OVERLYING BEDROCK — Bedrock-controlled landforms overlain by relatively thin lodgment till and ablation deposits. Foothill landforms are underlain by bedrock, but were overridden by glacier ice. Bedrock is generally within several meters of the surface, and crops out locally. Identified rock exposures indicated on map by spot symbol

Qpsc PRE-VASHON SILTS AND CLAYS — Compact bedded sandy silt, silt, and clay that may include interbeds of peat. Origin may be nonglacial or glacial. Shown only on sea cliff section

Qu QUATERNARY DEPOSITS, UNDIFFERENTIATED — Generally found along steep slopes of sea cliffs and along stream valleys where exposures are poor. Stratigraphic section shows more detail at specific sea cliff exposure

Ttr TWIN RIVER GROUP, UNDIFFERENTIATED — Marine sandstones, siltstones and mudstones. Late Eocene to early Miocene

Tal ALDWELL FORMATION — Upper and middle Eocene siltstone and sandstone

Tcb CRESCENT FORMATION BASALT — Primarily middle and lower Eocene submarine basalt flows and breccias. In Caraco Creek (sections 13 and 14, T. 29 N., R. 4 W.) the Crescent Formation consists of argillaceous and(or) volcaniclastic rocks

Tbm BLUE MOUNTAIN UNIT OF TABOR AND CADY (1978) — Middle and lower(?) Eocene sandstone and argillite

REFERENCE

Tabor, R. W.; Cady, W. M., 1978, Geologic map of the Olympic Peninsula, Washington: U.S. Geological Survey Miscellaneous Investigations Series Map I-994, 2 sheets, scale 1:250,000.

PRELIMINARY SURFICIAL GEOLOGIC MAP OF THE CARLSBORG QUADRANGLE, CLALLAM COUNTY, WASHINGTON

by
Kurt Othberg and Pamela Palmer

1979

SCALE 1:24 000

1 MILE — 1000 0 1000 2000 3000 4000 5000 6000 7000 FEET — 1 KILOMETER

CONTOUR INTERVAL 40 FEET
DASHED LINES REPRESENT 20-FOOT CONTOURS
NATIONAL GEODETIC VERTICAL DATUM OF 1929
DEPTH CURVES IN FEET—DATUM IS MEAN LOWER LOW WATER
SHORELINE SHOWN REPRESENTS THE APPROXIMATE LINE OF MEAN HIGH WATER
THE MEAN RANGE OF TIDE IS APPROXIMATELY 4 FEET

GN MN 22° 391 MILS 0°08' 2 MILS

UTM GRID AND 1978 MAGNETIC NORTH DECLINATION AT CENTER OF SHEET

WASHINGTON
QUADRANGLE LOCATION