Preliminary Surficial Geologic Map of the Sequim Quadrangle, Clallam County, Washington

by K. Othberg and P. Palmer

Correlation of Units – Sequim Quadrangle

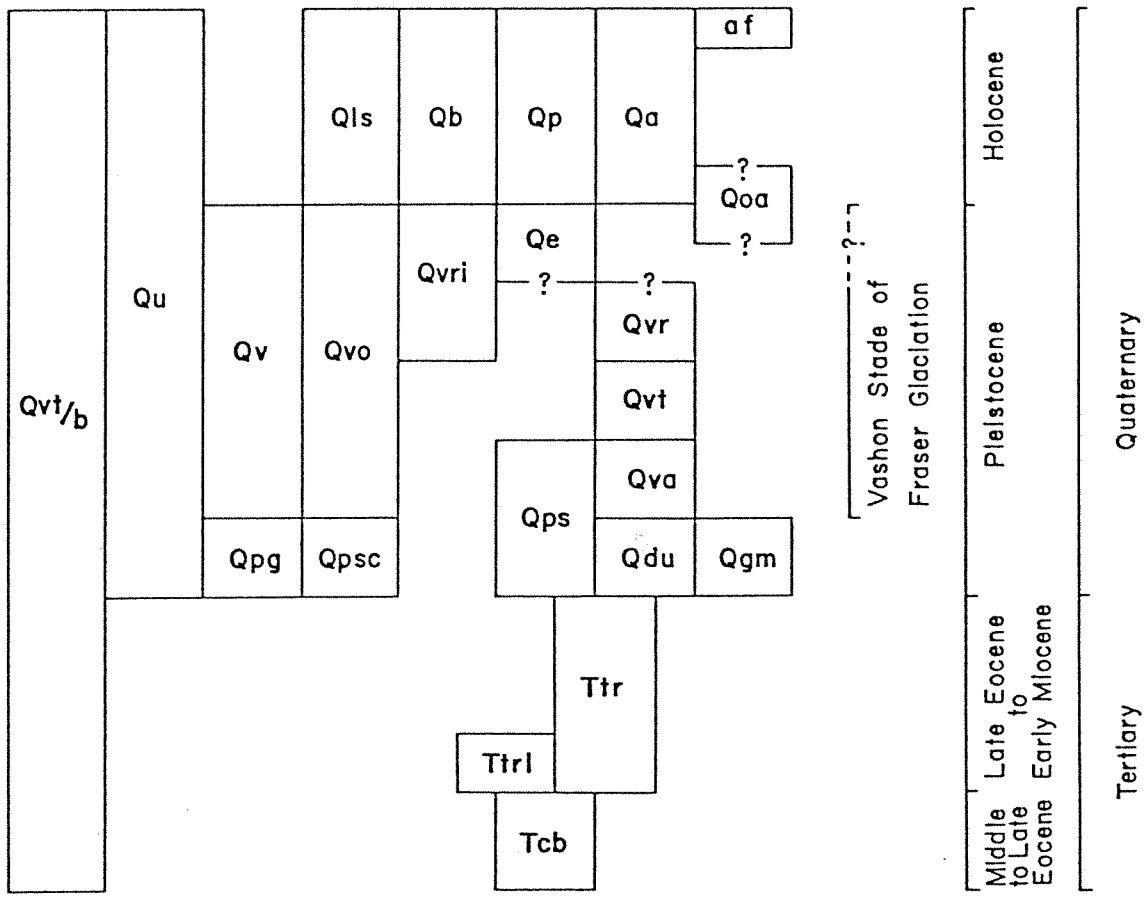

Description of Units

af **Artificial fill**

Artificial fill, topography modified by relatively thick addition of soil, sediments, rock, vegetative debris and garbage

Qa **Alluvium**

Deposited in and along present streams. Varies from cobbly stream gravels laid down in channels to finer grained sands, silts, and clays deposited in a floodplain environment. Particle sizes vary laterally and vertically due to the lateral migration of streams across their floodplains. Primarily fine grained; deposited in near-shore and deltaic environments; includes significant but unmappable quantities of organic matter. Subject to high water tables

Qb **Beach deposits**

Varies from sand to sandy, pebble gravels. Includes spits and bars created by longshore drift of sediments

Qp Peat and marsh deposits

Formed by the accumulation and decomposition of organic material in wet depressions and other areas of poor drainage. Includes local areas of fine-grained, saturated sediments and organic matter found in fresh- and salt-water swamps, marshes, and bogs.

Qls Landslide

Mapped where there is a geomorphic expression of active or old landslides. Generally outlines entire landform, from headwall to toe. May include both landslide scars and debris. Debris consists of variously textured colluvium resulting from slumps, slides, falls, and flows

Qoa Older alluvium

Floodplain terrace deposits of ancient Dungeness River. Consists of cobble gravels near Sequim and upslope to the southwest to progressively finer grain sizes downslope to the northeast, following the underfit streams, Cassalery, Gierin and Bell Creeks. Probably represents different times and levels of deposition by early Dungeness River. Not subject to seasonal flooding

Qe Everson Glaciomarine Drift

Poorly sorted, weakly stratified to massive deposit of pebbly silt and clay. Lithology includes bedded silt and sand in vicinity of Geirin Creek valley, possibly due to influence of stream sediment near Everson marine shoreline. North of Grennan Hill in the Sunland development (sec. 8, T. 30 N., R. 3 W.), interfingers with and (or) fills small depressions on ice-contact stratified gravels. Qe not mapped separately here, but included in Qvri, Vashon recessional, ice-contact stratified gravels and fine-grained marine sediments. Samples from a roadcut near Gaskell Slough (sec. 6, T. 30 N., R. 3 W.), contained marine fossils. Stratigraphically and lithologically, unit appears to correlate with the Everson Glaciomarine Drift.

Qvri Vashon recessional, ice-contact stratified gravels, and fine-grained marine sediments

Characterized by ice-contact morphology (mounds and basins); sediments showing deformation as a result of the melting of supporting ice. In places, stratified gravels interfinger with locally fossiliferous, pebbly, silty clay interpreted as Everson Glaciomarine Drift. This suggests that stratified gravels were being deposited near the melting ice margin in association with a coastal glacial marine environment

Qvr Vashon recessional outwash and ice-contact stratified drift

Primarily sand and gravel melt-water deposits and highly varied sediments resulting from deposition upon, within, or near stagnant ice. Includes sand and gravel deposits and alluvial fans formed by relict streams that flowed off the bedrock highs in the southern part of the map. Streams may have been active during ice recession in this area, but some of the deposits may be Holocene in age

Qvt Vashon till

Lodgment till, a compact, poorly sorted nonstratified pebbly sandy silt with occasional boulders; generally quite hard as a result of compaction by thick glacier ice. Mapped where thickness is greater than approximately 1 meter. May include local areas of ablation till, generally a loose, nonstratified pebbly silty sand with noticeable voids

Qvt/b Vashon till overlying bedrock

Bedrock-controlled landforms overlain by relatively thin lodgment till and ablation deposits. Foothill landforms are underlain by bedrock, but were overridden by glacier ice. Bedrock is generally within several meters of the surface, and crops out locally. Identified rock exposures indicated on map by spot symbol (⊙ Tcb).

Qva Vashon advance outwash

Well-sorted, well-stratified sandy pebble to cobble gravel. Mapped where its stratigraphic position beneath the Vashon till can be established. Sediments represent melt-water deposits from the advancing front of the glacier

Qvo Vashon outwash undifferentiated

Well-sorted, well-stratified sand and pebbly sand. Relative age with respect to Vashon till not established

Qv Vashon Drift undifferentiated

Mapped at Port Williams where it consists primarily of sandy pebble gravel with minor lenses or remnants of till located high in the unit. Gravel may be mostly advance outwash

Qps Pre-Vashon-till sands

Pebbly silty sands of unknown origin, stratigraphically older than Vashon till. May locally include the Esperance Sand Member of Vashon Drift

Qpg Pre-Vashon gravels

Sandy pebble to cobble gravels of varied origins; older than Vashon Drift. Gravels include glacially derived gravelly outwash, fluvial gravels with interbeds of sand and silt, and gravels of unknown origin. Commonly characterized by iron-oxide staining and partial cementation

Qpsc Pre-Vashon silts and clays

Compact bedded sandy silt, silt, and clay that may include interbeds of peat. Origin may be nonglacial or glacial. All deposits mapped are older than Vashon Drift.

Qdu Pre-Vashon diamictons undifferentiated

Undifferentiated diamictons older than Vashon Drift. Typically, deposits are very stony, sandy "tills" or pebbly, clayey silts

Qgm Pre-Vashon glaciomarine drift

Fossiliferous pebbly, silty clay. Mapped at Port Williams where it conformably overlies a nonfossiliferous diamicton. See cross-section A-A'

Qu Quaternary deposits undifferentiated

Generally found along steep slopes of sea cliffs and along stream valleys where exposures are poor. Where possible, stratigraphic sections show more detailed subdivision, correlations, approximate thicknesses, and lithologies at specific sea cliff exposures

Ttr Twin River Formation undifferentiated

Clastic marine sedimentary rocks more than 17,000 feet thick. The Twin River Formation is divided, on the basis of lithology, into three members: a lower member consisting chiefly of bedded sandstones and siltstones; a middle member in which massive siltstone is predominant; and an upper member consisting of massive mudstone with minor amounts of thin bedded sandstone. Fossils indicate an age of late Eocene to early Miocene (Tabor and Cady, 1978)

Ttrl Twin River Formation, lower member

The lower member of the Twin River Formation, identified as late Eocene in age based on fossil content. Lithology consists mainly of well-bedded lithic sandstone with some siltstone.

Tcb Crescent Formation basalt

Primarily Eocene submarine basalt flows and breccias

UNITED STATES
DEPARTMENT OF THE INTERIOR
GEOLOGICAL SURVEY

SEQUIM QUADRANGLE
WASHINGTON—CLALLAM CO.
7.5 MINUTE SERIES (TOPOGRAPHIC)
SE/4 DUNGENESS 15' QUADRANGLE

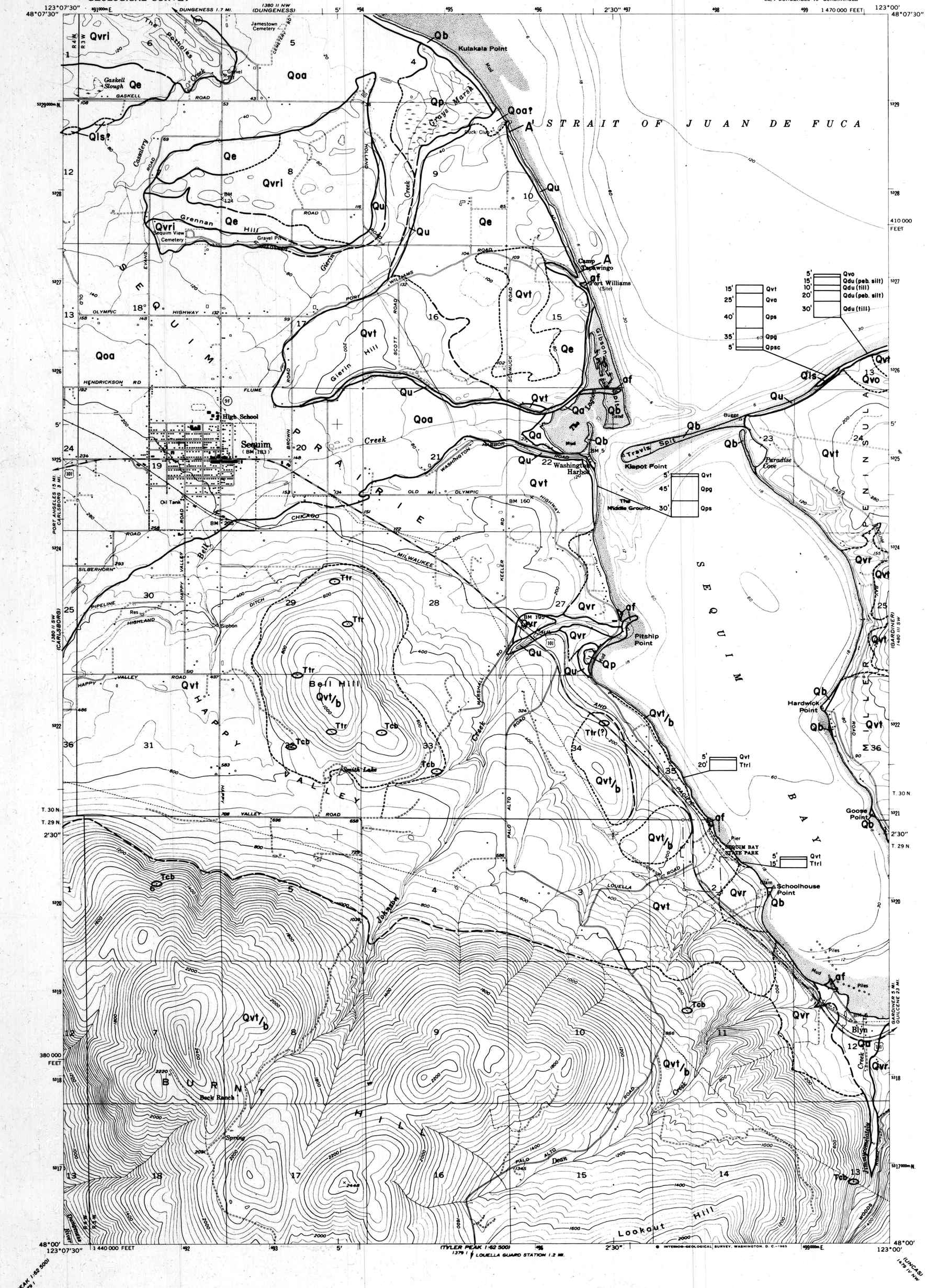

OPEN FILE OF 79-18

PRELIMINARY SURFICIAL GEOLOGIC MAP OF THE SEQUIM QUADRANGLE, CLALLAM COUNTY, WASHINGTON

by

K. Othberg
and
P. Palmer

EXPLANATION

af	Artificial fill
Qa	Alluvium
Qb	Beach deposits
Qp	Peat and marsh deposits
Qls	Landslide
Qoa	Older alluvium
Qe	Everson Glaciomarine Drift
Qvri	Vashon recessional, ice-contact stratified gravels and fine-grained marine sediments
Qvr	Vashon recessional outwash and ice-contact stratified drift
Qvt	Vashon till
Qvt/b	Vashon till overlying bedrock
Qva	Vashon advance outwash
Qvo	Vashon outwash undifferentiated
Qv	Vashon Drift undifferentiated
Qps	Pre-Vashon-till sands
Qpg	Pre-Vashon gravels
Qpsc	Pre-Vashon silts and clays
Qdu	Pre-Vashon diamictons undifferentiated
Qgm	Pre-Vashon glaciomarine drift
Qu	Quaternary deposits undifferentiated
Ttr	Twin River Formation undifferentiated
Ttrl	Twin River Formation, lower member
Tcb	Crescent Formation basalt

definite contact

approximate contact

inferred contact

exposure of identified bedrock

SCALE 1:24000

1 ½ 0 1 MILE

1000 0 1000 2000 3000 4000 5000 6000 7000 FEET

1 .5 0 1 KILOMETER

CONTOUR INTERVAL 40 FEET
DASHED LINES REPRESENT 20-FOOT CONTOURS
DATUM IS MEAN SEA LEVEL
DEPTH CURVES IN FEET—DATUM IS MEAN LOWER LOW WATER
SHORELINE SHOWN REPRESENTS THE APPROXIMATE LINE OF MEAN HIGH WATER
THE MEAN RANGE OF TIDE IS APPROXIMATELY 5 FEET

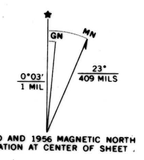

UTM GRID AND 1956 MAGNETIC NORTH DECLINATION AT CENTER OF SHEET
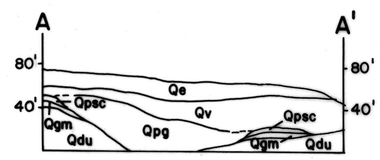
QUADRANGLE LOCATION